Inclinometers for slope angles with two programmable switchpoints B1N360V-Q20L60-2UP6X3-H1151

Industrial Automation

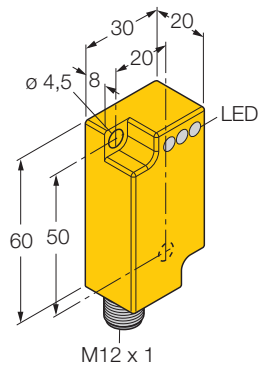

- **Cuboid-shaped, height 20 mm**
- **Plastic, PBT-GF20-V0**
- **Indication of operating voltage and switching state**
- **Two programmable switching outputs**
- **Switchpoints selectable in a range between 0° and 360°**
- **Adjustable travel path and hysteresis**
- **DC 4-wire, 10…30 VDC**
- **Male connector M12 x 1**

Type	B1N360V-Q20L60-2UP6X3-H1151
Ident-No.	1534051
Measuring range [A…B]	0… 360 °
Mounting condition	vertical
Repeatability	≤ 2 %
Absolute accuracy (at 25°C)	+/- 0.5°
Temperature drift	≤ ± 0.03 % / K
Resolution	≤ 0.14°
Hysteresis	0… 1 %
Ambient temperature	-30…+ 70 °C
Operating voltage	10… 30 VDC
Residual ripple	≤ 10 % U_{ss}
No-load current I_0	≤ 35 mA
Residual current	≤ 0.1 mA
Rated insulation voltage	≤ 0.5 kV
Output current	≤ 500 mA
Short-circuit protection	yes / thermal
Voltage drop at I_e	≤ 1 V
Wire breakage / Reverse polarity protection	yes / complete
Overvoltage protection	-30… 40 VDC [$U_{b\ max.}$]
Output function	4-wire, programmable, 2 x PNP
Housing	rectangular, Q20L60
Dimensions	60 x 30 x 20 mm
Housing material	Plastic, PBT-GF20-V0
Electrical connection	Connectors, M12 x 1
Vibration resistance	55 Hz (1 mm)
Shock resistance	30g (11 ms)
Protection class	IP68
Operating voltage	LED green
Switching state	2 x LEDs yellow

Wiring diagram

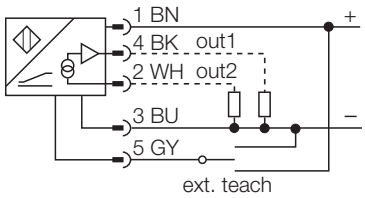

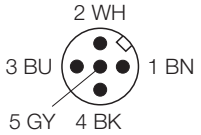

Functional principle

Inclination is determined by a wear-free semiconducting sensor element.

• Edition: • 02.06.2010

Inclinometers for slope angles with two programmable switchpoints B1N360V-Q20L60-2UP6X3-H1151

Industrial Automation

Mounting instructions

Power-on, indicator	LED
Power-on, color	green

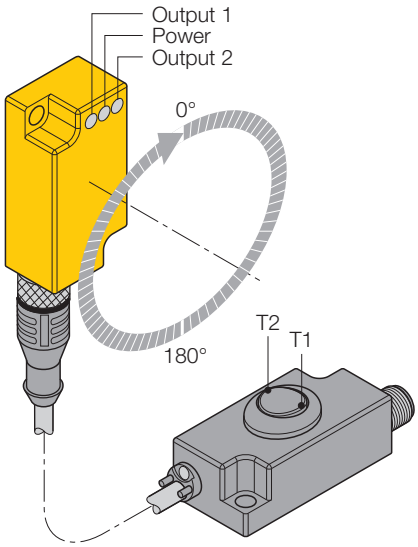

Teaching of inclinometer via teach-adapter TX1-Q20L60

It is possible to teach the operating and release points anywhere within the 360° of travel.

You can teach the operating and release points in either CW or CCW direction.

Position the inclinometer at it's start position before programming the user defined operating and release points. Exact details of the programming steps will follow. When programming the user defined release point you must reposition the sensor to that physical position. The sensor must be placed in a vertical position as shown.

There is a second programming method where you select the start position and the offset for the release point is exactly 180°.

• Edition: • 02.06.2010

Operating manual

Switchpoint adjustable as NO contact counterclockwise or as NC contact clockwise

Press T1 (T2) for 5 sec.
Power LED flashing
Place the sensor in the wanted start position
Press T1 (T2) for 1 sec. to set the switch-on point
Power LED and Output 1 (2) LED flashing
Place the sensor in the wanted end position
Press T1 (T2) for 3 sec. to set the switch-off point
Power LED and Output 1 (2) LED flashing 3 sec. then steady
Teach process completed, sensor ready for operation.

Switchpoint adjustable as NO contact clockwise or as NC contact counterclockwise

Press T1 (T2) for 5 sec.
Power LED flashing
Place the sensor in the wanted start position
Press T1 (T2) for 3 sec. to set the switch-on point
Power LED and Output 1 (2) LED flashing fast
Place the sensor in the wanted end position
Press T1 (T2) for 1 sec. to set the switch-off point
Power LED and Output 1 (2) LED flashing 3 sec. then steady
Teach process completed, sensor ready for operation.

Switchpoint adjustable as NO contact counterclockwise or as NC contact clockwise (180° default setting)

Press T1 (T2) for 5 sec.
Power LED flashing
Place the sensor in the wanted start position
Press T1 (T2) for 1 sec. to set the switch-on point
Power LED and Output 1 (2) LED flashing
Press T1 (T2) for 1 sec. to set the travel path 180° and the hysteresis 1°
Power LED and Output 1 (2) LED flashing 3 sec. then steady
Teach process completed, sensor ready for operation.

Switchpoint adjustable as NO contact clockwise or as NC contact counterclockwise (180° default setting)

Press T1 (T2) for 5 sec.
Power LED flashing
Place the sensor in the wanted start position
Press T1 (T2) for 3 sec. to set the switch-on point
Power LED and Output 1 (2) LED flashing fast
Press T1 (T2) for 3 sec. to set the travel path 180° and the hysteresis 1°
Power LED and Output 1 (2) LED flashing 3 sec. then steady
Teach process completed, sensor ready for operation.

Default setting:
Travel path 180°
Hysteresis 1°

• Edition: • 02.06.2010